KITZ

KELMO® Electric Actuator Driven Compact Ball Valves

■KITZ Electric Actuators : EA, EC, EAE and ED Series
■100V / 200V AC · 50Hz / 60Hz, 12V / 24V DC
■Class 10K Bronze and Stainless Steel Threaded Ball Valves

KITZ CORPORATION

KITZ 10K Compact Ball Valves

Valve design features

- Convenient size range from ¼″ through 2″.
- Integral actuator mounting pads enabling easy mounting or dismantling of actuators for maintenance service.
- Tight contact between PTFE ball seats and high precision machined balls for leakage-free service.
- Dezincification resistant stems made of KITZ's special copper alloy K-Metal for long service life of valve operating mechanism.
- Choice of materials: Stainless steel for corrosion resistant service, or brass and bronze for general W.O.G. service.

Valve design specifications

Threaded ends:	JIS B 0203
Union ends:	JIS B 2301
Maximum service pressure:	0.98MPa (10kgf/cm²) TKE, TKVE & TKSE for ¾″ and larger and 5UTWE: 0.48MPa (5kgf/cm²)
Seat P-T rating:	See Page 3
Test pressure:	Body: 2.06MPa (21kgf/cm²) Hydrostatic Seat: 0.59MPa (6kgf/cm²) Pneumatic

Ball valve design and applications

KITZ Fig.	JIS Material	Port	Bore*	Neck	End connection	Applications	Actuator
TE	BC6	2-way	S.B.	Short	Threaded	On-off control of water, oil, and gas.	EA EAB EAR EARB ED EAE**
TFE	C3771BE or BC6		F.B.				
TLE	BC6		S.B.	Long		Insulation for thermal isolation.	
TNE		Horizontal 3-way		Short		Instantaneous change of line fluid.	
TGE		2-way				Glanded high temperature service.	
TUE			R.B.		Male and female threaded with an union ring	Easy installation.	
TLUE				Long		TUE with insulation for thermal isolation.	
TKE	Chrome plating C3771BE			Short	Threaded	On-off control of water, oil and gas. M5 tapped for panel mounting.	EC ECR
TKVE		Vertical 3-way				Instantaneous change of line fluid. (No concern of fluid contamination.)	ECS ECSR
TKSE		2-way	R.B.			On-off control of water, oil and gas. M5 tapped for panel mounting.	EAE**
TNVE	BC6	Vertical 3-way	S.B.			Instantaneous change of line fluid. (No concern of fluid contamination.)	EAS EASB
UTE	SCS14A	2-way	R.B.			TE made of stainless steel.	EA EAB EAR EARB ED EAE**
UTFE			F.B.			TFE made of stainless steel.	
UTGE			R.B.			TGE made of stainless steel.	
UTWE	SCS13A		F.B.		Wafer	Full bore wafer design. Maintenance ease.	
UTVE	SCS14A	Vertical 3-way	R.B.		Threaded	Integrally molded body. Instantaneous change of fluid. (No concern of fluid contamination.)	EAS EASB

*Bore design: F.B.=Full bore, S.B.=Standard bore, R.B.=Reduced bore to API 608.
**EAE Series are available only for TE, TNE, TUE, TKSE and UTE ball valves.

Applications

Automated on-off or 3-way flow control in HAVC service handling water, oil, gas and air (by brass and bronze valves) or in light load industrial processes for pharmaceutical, fine chemical, petro-chemical, food, beverage, textile and other general industries.

Precautions

① No application to fluids including powders, muds or sands.

② • Fluid of high viscosity, steam or vacuum
- Operational frequence higher than 10 times an hour
- Velocity of 3 m/sec or faster
- Service with concern of an extraordinary pressure raise of line fluid or a variation of fluid temperature higher than 60°C.
- For line voltage other than KITZ standard specification. Contact KITZ or its local distributors for technical advice on application to:

KITZ 10K Compact Ball Valves

Valve flow coefficient (Cv for fully opened valves)

KITZ Fig. \ Size (inch)	¼	⅜	½	¾	1	1¼	1½	2
TE·TLE*	—	2.1	5.6	15	27	45	85	120
TNE	0.5	1	3	6	11	17	28	37
TGE	—	2.1	5.6	15	27	—	—	—
TUE·TLUE	—	—	3	6.2	—	—	—	—
TKE·TKSE*	0.9	2.4	3.4	6.1	11.5	—	—	—
TNVE	—	—	3	7.3	13	17	—	—
TKVE	—	—	2	3.6	6.5	—	—	—
UTE·UTGE*	1	2	5	10	15	20	37	60
TFE·UTFE	—	—	18	46	58	92	170	—
UTWE	—	6.5	18	46	58	—	—	—
UTVE	0.5	1	2.2	3.9	7	—	—	—

* ½″ and larger for TLE. 1″ and smaller for UTGE. ¾″ and smaller for TKSE.

PTFE seat pressure-temperature ratings

Valve: TE·TFE·TLE·TNE·TUE·TLUE·UTE·UTFE·UTWE
- Fluid: water, oil or gas (unfrozen)
- Ball seat: PTFE (standard)
- O-ring: FPM (standard)

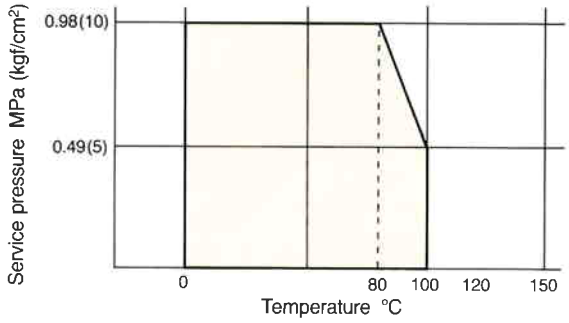

Valve: TGE
- Fluid: water, oil or gas (unfrozen)
- Ball seat: reinforced PTFE
- Gland packing: inconel wired asbestos

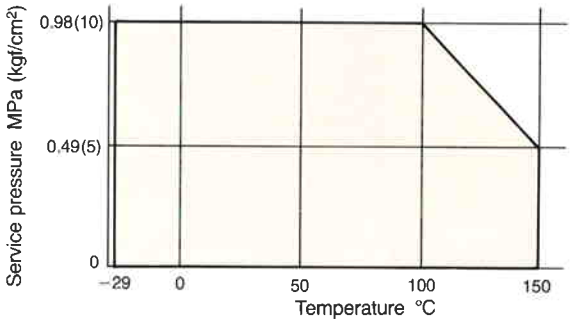

Valve: TE·TFE·TLE·TNE·TUE·TLUE·UTE·UTFE·UTWE
- Fluid: water, oil, gas (unfrozen) or saturated steam
- Ball seat: reinforced PTFE (option*)
- O-ring: Special FPM (option*)

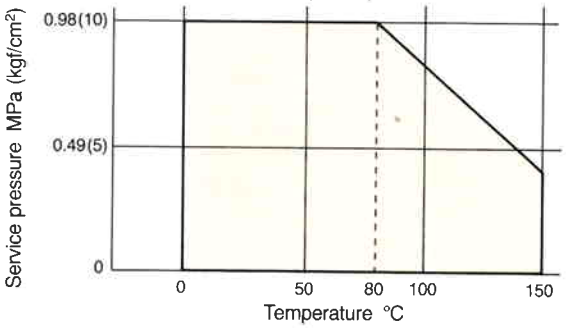

Valve: UTGE
- Fluid: water, oil, gas (unfrozen) or saturated steam
- Ball seat: reinforced PTFE
- Gland packing: inconel wired asbestos

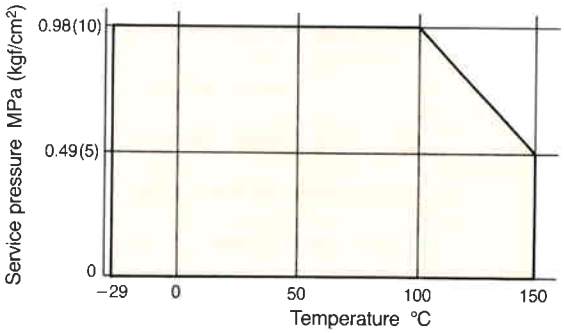

* Specify these materials in your orders so that valves can perform the pressure-temperature ratings mentioned here, except 1½″ and 2″ for which only standard materials are available.

Note:
- Refer to Page 23 for PTFE pressure-temperature ratings of TKE, TKVE and TKSE.
- Ambient temperature depends on the design of actuators. Refer to the information given for each of actuators introduced in this catalog.

KITZ KELMO® Electric Actuators: EA, EC and ED Series

General design features

- Compact size and light weight with diecast aluminium housing and powerful miniature motor for economy and handling ease.
- Simple mechanism with minimized number of component parts for high durability and trouble-free service.
- Free from concerns common with conventional solenoid valves such as water hammer, pressure loss, malfunction caused by jammed valve interior, and restricted flow direction.
- All weather type design for outdoor service.
- Availability of manual operation in case of electric failure.
- Versatile applications by means of optional built-in relay circuit for parallel drive, terminal boxes and 180° rotary mechanism for 3-way flow direction.
- Safety provision to protect the motor from overheat damage caused by accidental overload.
- Factory-made actuator-to-valve assembly for off-the-shelf supply.

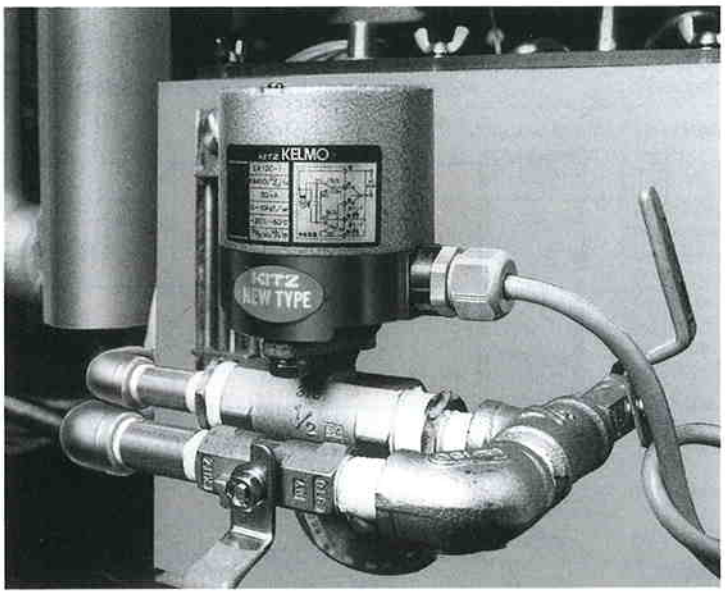

KITZ KELMO® Electric Actuators

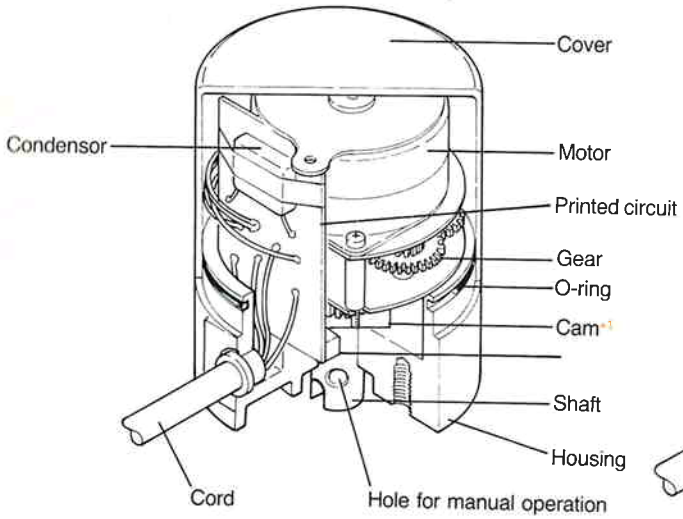

Type EA100 / 200 Size 1 & 1.5

*1 Different cam design for Type EAS100 / 200-1

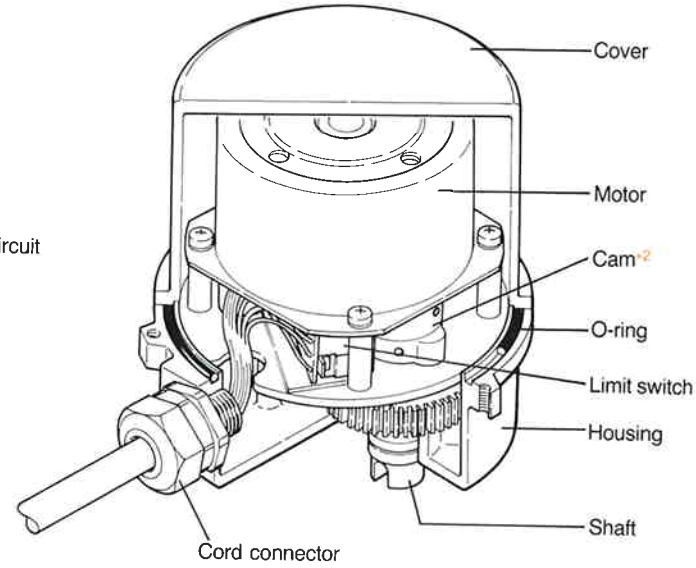

Type EA100 / 200 Size 2

*2 Different cam design for Type EAS100 / 200-2

Compact KELMO® actuators: power sources and functional features

Type of actuator		Power source	Functional features
EA Series	EA100 / EA200	100V AC 200V AC (50Hz / 60Hz)	90° bi-directional rotation
	EAB100 / EAB200		90° bi-directional rotation / Terminal box
	EAR100 / EAR200		90° bi-directional rotation / Built-in relay
	EARB100 / EARB200		90° bi-directional rotation / Built-in relay / Terminal box
	EAS100 / EAS200		180° bi-directional rotation
	EASB100 / EASB200		180° bi-directional rotation / Terminal box
EC Series	EC100 / EC200	100V AC 200V AC (50Hz / 60Hz)	90° Uni-directional rotation
	ECR100 / ECR200		90° Uni-directional rotation / Built-in relay
	ECS100 / ECS200		180° Uni-directional rotation
	ECSR100 / ECSR200		180° Uni-directional rotation / Built-in relay
EAE Series	EAE100 / EAE200	100V / 200V AC (50Hz / 60Hz)	90° bi-directional rotation / Spring-return
ED Series	ED12 / ED24	12V / 24V DC	90° bi-directional rotation / Parallel drive

Type EA Electric Actuators / Class 10K Bronze or Stainless Steel Ball Valves

100V / 200V AC 50Hz / 60Hz

■ ***90° bi-directional rotation***

Type EA actuator design specifications

Specification \ Type		EA100-1	EA200-1	EA100-1.5	EA200-1.5	EA100-2	EA200-2
Power source 50Hz / 60Hz		100V AC	200V AC	100V AC	200V AC	100V AC	200V AC
Rated current		90mA	50mA	90mA	50mA	100mA	50mA
Max. power consumption		9W	10W	9W	10W	10W	
Valve closing time 90°	50Hz	6 sec.		12 sec.		15 sec.	
	60Hz	5 sec.		10 sec.		13 sec.	
Max. output torque		1.9N·m (20kgf.cm)		3.9N·m (40kgf·cm)		9.8N·m (100kgf·cm)	
Rated time		Continuous					
Insulation Class		JIS Class E					
Sensitive switch contact capacity		100V AC 3A (Resistan load) · 200V AC 1A (Resistan load)				100V AC 3A (Resistan load) · 250V AC 3A (Resistanload)	
Position limit switch		1 pce each for opening / closing (Using the source voltage)					
Insulation strength		1500V AC (1 min. interval)					
Insulation resistant		Minimum 10MΩ (500V DC)					
Standard protection		All weather type (for outdoor use)					
Ambient temperature		−20°C to +50°C					
Mounting position		Vertical to horizontal					
Wiring		Vinyl cabtyre cord with 5 cores					
		0.3mm² (700mm long)				0.5mm² (700mm long)	
Lubrication		Grease					
Overload protection		Impedance protection					
Coating color		Housing: black Cover: light blue					

Note: Contact to KITZ for technical advice when the service conditions are different.

Type EA actuator circuit diagrams (with the valve fully closed)

EA100 / 200 Size 1~2

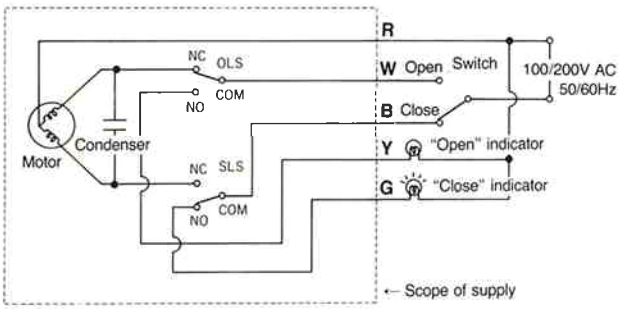

- Wire color: R red W white B black Y yellow G green
- Actuator rotates:
  R-W: counter-clockwise to fully open the valve
  R-B : clockwise to fully close the valve
- Limit switches activate:
  OLS: on fully opening the valve (R-W: off W-Y: on)
  SLS: on fully closing the valve (R-B: off B-G: on)

Note: For all sizes of Type EAB 100 / 200, the terminals are numbered 1, 2, 3, 4 and 5 in place of R, W, B, Y and G respectively.

Note:
- When two or more actuators are driven by a single switch, ensure to prevent unintended current flows by using relay contacts.
- Micro electric load caused by auxiliary devices such as lamps or relays may cause failure to the contacts of limit switches. Ask KITZ Corporation for advice when you have a concern of this kind.

Type EA Electric Actuators / Class 10K Bronze Ball Valves

Fig. EA100 / 200-TE

Actuator size: 1 and 1.5
Valve size: ⅜″ to 1″ (Standard bore)

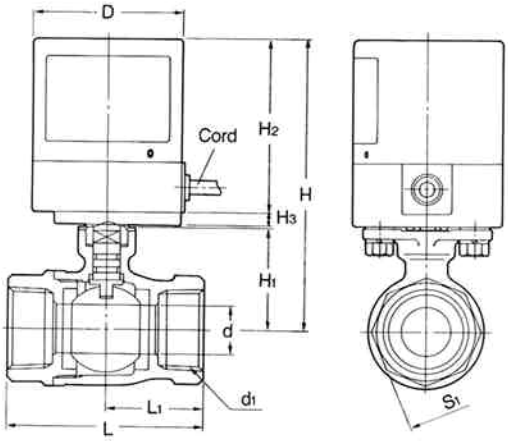

Valve material

Parts	JIS materials
Body	BC6
Body cap	C3771BE
Stem	K-Metal*1,*2
Ball	K-Metal*1+Ni-Cr plating
Ball seat	PTFE
O-ring	FPM

*1 K-Metal is a special brass developed for anti-dezincification.
*2 Cr plating (1½″ & 2″)

Dimensions

(mm)

Valve size (Inch)	d	d1	H	H1	L	L1	S1	Actuator H2	Actuator H3	Actuator D	Actuator Type
⅜	7.5	Rc⅜	104	28	46	22	22	70	5	60	EA100 / 200-1
½	10	Rc½	109.5	33.5	65	32.5	28				
¾	15	Rc¾	113.5	37.5	68	34	34				EA100 / 200-1.5
1	20	Rc1	117.5	41.5	79	39.5	41				

Fig. EA100 / 200-TE

Actuator size: 2
Valve size: 1¼″ to 2″ (Standard bore)

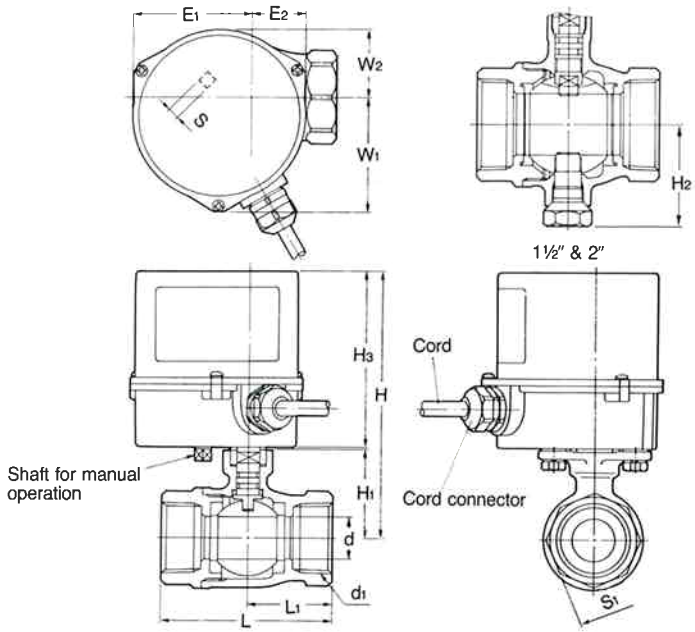

Dimensions

(mm)

Valve size (inch)	d	d1	H	H1	H2	L	L1	S1	Actuator H3	Actuator E1	Actuator E2	Actuator W1	Actuator W2	Actuator S	Actuator Type
1¼	25	Rc1¼	128.5	45.5	—	86	43	50	82	54.5	25	53	31.5	5.5	EA100 / 200-2
1½	32	Rc1½	142.5	59.5	53.5	96	48	56							
2	40	Rc2	148.5	65.5	60	109	54.5	68							

Type EA Electric Actuators / Class 10K Stainless Steel Ball Valves

Fig. EA100 / 200-UTFE

Actuator size: 1.5
Valve size: ½″ and ¾″ (Full bore)

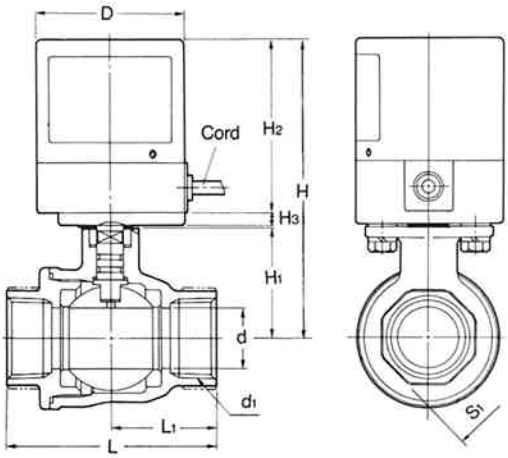

Valve material

Parts	JIS materials
Body	SCS14A
Body cap	SCS14A
Stem	SUS316+Cr plating
Ball	SUS316
Ball seat	PTFE
O-ring	FPM
Gasket	PTFE

Dimensions

(mm)

Valve size (inch)	d	d1	H	H1	L	L1	S1	Actuator			
								H2	H3	D	Type
½	15	Rc½	113.5	37.5	62	31	26	70	5	60	EA100 / 200-1.5
¾	20	Rc¾	117.5	41.5	73	36.5	32				

Fig. EA100 / 200-UTFE

Actuator size: 2
Valve size: 1″ to 1½″ (Full bore)

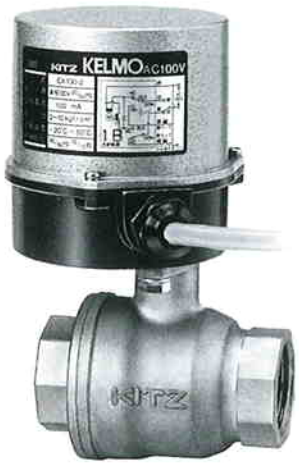

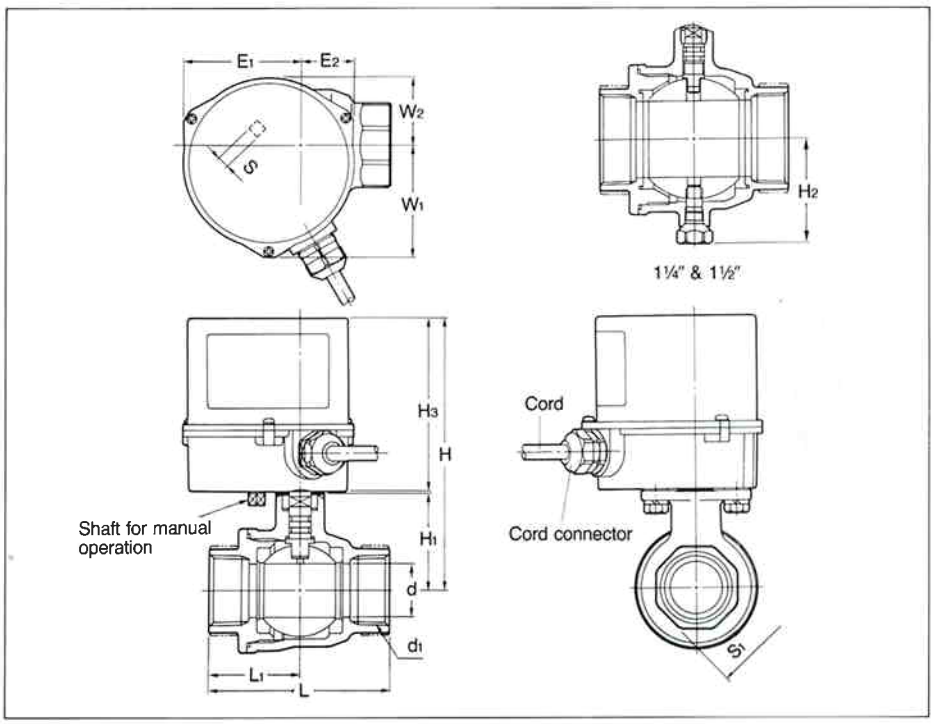

Dimensions

(mm)

Valve size (inch)	d	d1	H	H1	H2	L	L1	S1	Actuator						
									H3	E1	E2	W1	W2	S	Type
1	25	Rc1	128.5	45.5	—	85	42.5	39	82	54.5	25	53	31.5	5.5	EA100 / 200-2
1¼	32	Rc1¼	143.5	60.5	55	98	49	48							
1½	40	Rc1½	149.5	66.5	61	108	54	54							

Precautions for Trouble-free Operation

Storage and Handling

Electrically operated KITZ compact ball valves are individually packed in styrofoam boxes. Don't unpack until you are ready to mount on the pipeline. Store in dry, corrosion-free environment to keep rust-free, although they are adequately coated for primary protection. Handle units carefully when actuators are equipped with solenoid valves and other accessories. Don't place any other objects on actuators, and don't step on actuators. Overloading actuators must always be prevented.

Mounting and Piping

Before mounting electrically operated KITZ compact ball valves, make visual inspection of all valves, actuators and accessories to assure trouble-free condition. Tighten any loosened boltings securely. Clean valve and pipe bores to remove welding spatters, scales or any other foreign objects which may have been left inside. After mounting has been completed, blow the inside of all connected pipes and valves prior to the pilot operation of the system.

Don't use them in explosive or corrosive gaseous conditions, to avoid explosions, or defects to terminal contacts.

Wiring and Operation

Color-coded wires should be connected to each correct terminal according to the actuator circuit diagram shown on each page of this catalog. Incorrect wiring may damage electric components and accessories.

The following actuator are not provided with built-in relays. For parallel operation with other actuators, be sure to deploy a separate relay for each valve to drive.

EA	**EC**
EAB	**ECS**
EAS	**EAE**
EASB	**ED**

When valve opening or closing indicator lamp is not required, cut the exposed part of the wire end and isolate it from the electric current. Before manual operation, be sure to turn off the switch.

Maintenance

Disassembly of actuators is not recommended. Electrically operated KITZ compact ball valves can be mounted vertically, horizontally or with any intermediate angle as illustrated here. However, don't mount any lower than the horizontal level, as intrusion of rainwater may affect the quality of electric components and accessories.