Glenfield

Water engineers to the world

# Series 854/00 (1005) PN 16, Equlibrium Ball Float Valve, 50mm-300mm

## Use

For water and neutral liquids to max. 70°C

## Tests

Hydraulic tests:

Seat: 1.1 x PN

Body: 1.5 x PN

## Optional Extras

- Drilled Flanged Outlet
- Specially Ported Guides
- Alternative Trims
- Non-Standard Flanges
- Vertical Float Rod Arrangement (ex 1060)
- Delayed Action Tank Arrangement (ex 1064)

## Applicable Standards

Inlet flange faced & drilled to BS EN1092-2: PN16
(Outlet Flange Undrilled.)

## Materials of Construction

| Description | Material |
|---|---|
| Body | Ductile Iron BS EN 1563 EN-GJS-500/7 |
| Cylinder | Ductile Iron BS EN 1563 EN-GJS-500/7 |
| Fulcrum Bracket | Ductile Iron BS EN 1563 EN-GJS-500/7 |
| Valve Centre (150-300mm) | Ductile Iron BS EN 1563 EN-GJS-500/7 |
| Valve Centre (50 - 100mm) | Gunmetal BS EN 1982:1999 CC491K |
| Seat Ring | Gunmetal BS EN 1982:1999 CC491K |
| Valve Piston | Gunmetal BS EN 1982:1999 CC491K |
| Valve Guide | Gunmetal BS EN 1982:1999 CC491K |
| Split Pins | Copper |
| Lever | Carbon Steel BS EN 970 220 M07 |
| Links | Stainless Steel |
| Hinge Pins | Stainless Steel BS EN 10088 Gr 1.4305 |
| Float | Polypropylene / Stainless Steel |
| Seals | EPDM WBS Listed |
| Fasteners | High Tensile Steel |
| Coating | Internal and external, electrostatically applied blue epoxy to WIS 4-52-01 Class B |

**Glenfield Valves Ltd,** Glenfield Works, Queens Drive, Kilmarnock, Scotland, KA1 3XF
Tel: +44 (0) 1563 521150 Fax: +44 (0) 1563 545616 www.glenfield.co.uk
A member of the AVK group of companies

# SPECIFICATIONS

## Series 854/00 (1005) PN 16, Equlibrium Ball Float Valve, 50mm-300mm

### Component List

1. Body
2. Cylinder
3. Fulcrum Bracket
4. Valve Centre
5. Seat Ring
6. Valve Piston
7. Lever
8. Fasteners
9. Seals
10. Links
11. Hinge Pins
12. Float
13. Valve Guide

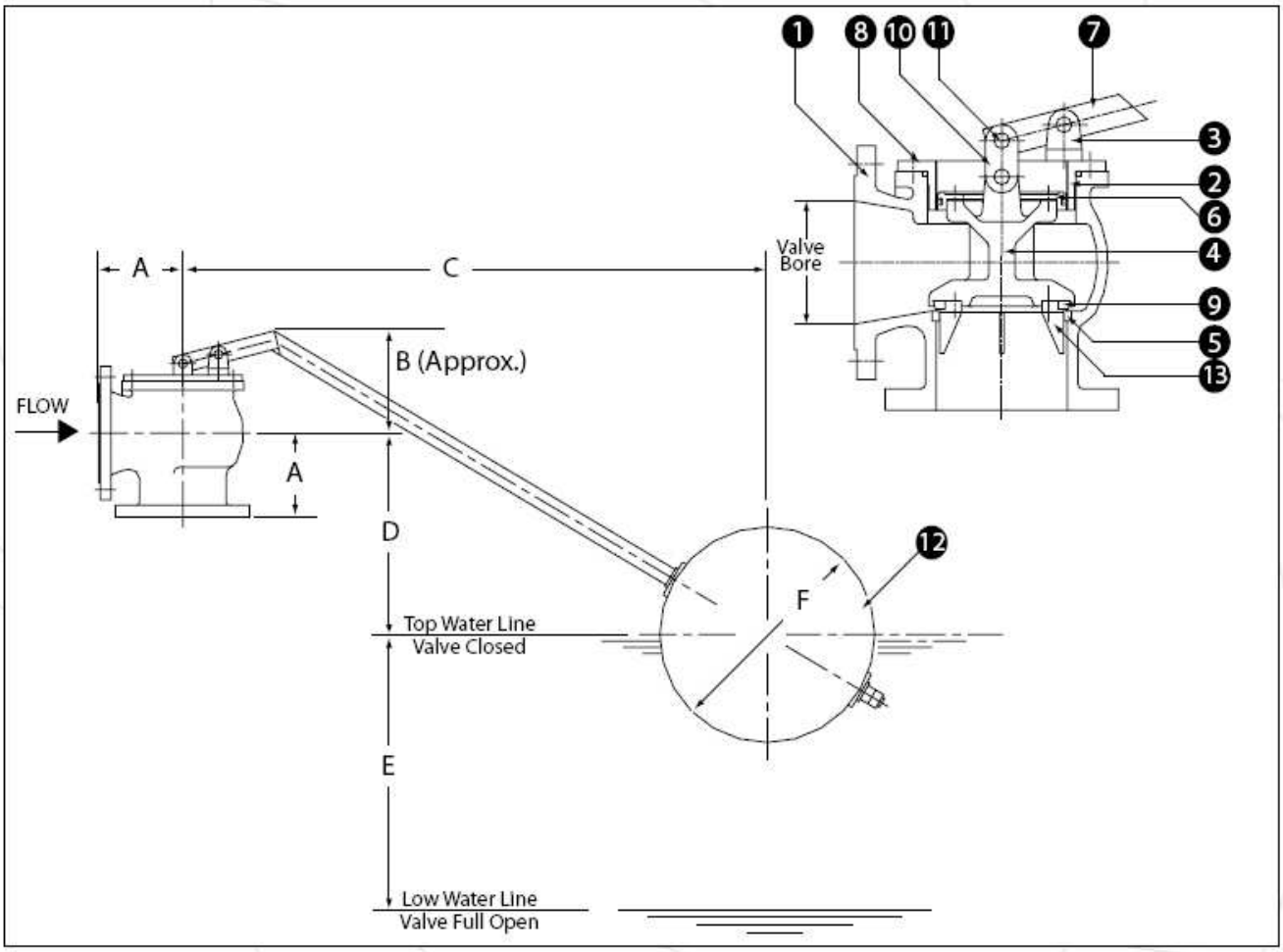


### Dimensions (mm)

| Ref Nos. | DN | A | B | C | D | E | F | Approx Weight (kg) | Max.Recommended Discharge (litres/sec) |
|---|---|---|---|---|---|---|---|---|---|
| 854-050-001001000 | 50 | 110 | 110 | 700 | 260 | 170 | 300 | 16 | 6 |
| 854-080-001001000 | 80 | 130 | 145 | 850 | 300 | 250 | 410 | 22 | 14 |
| 854-100-001001000 | 100 | 140 | 160 | 1000 | 380 | 330 | 410 | 33 | 25 |
| 854-150-001001000 | 150 | 180 | 210 | 1250 | 470 | 480 | 460 | 66 | 55 |
| 854-200-001001000 | 200 | 220 | 270 | 1500 | 570 | 650 | 460 | 118 | 97 |
| 854-250-001001000 | 250 | 250 | 330 | 1800 | 650 | 810 | 540 | 184 | 152 |
| 854-300-001001000 | 300 | 300 | 380 | 2200 | 750 | 930 | 540 | 260 | 220 |



The designs, materials and specifications shown are subject to change without notice due to our continuing programme of product development